# Meter Test Equipment

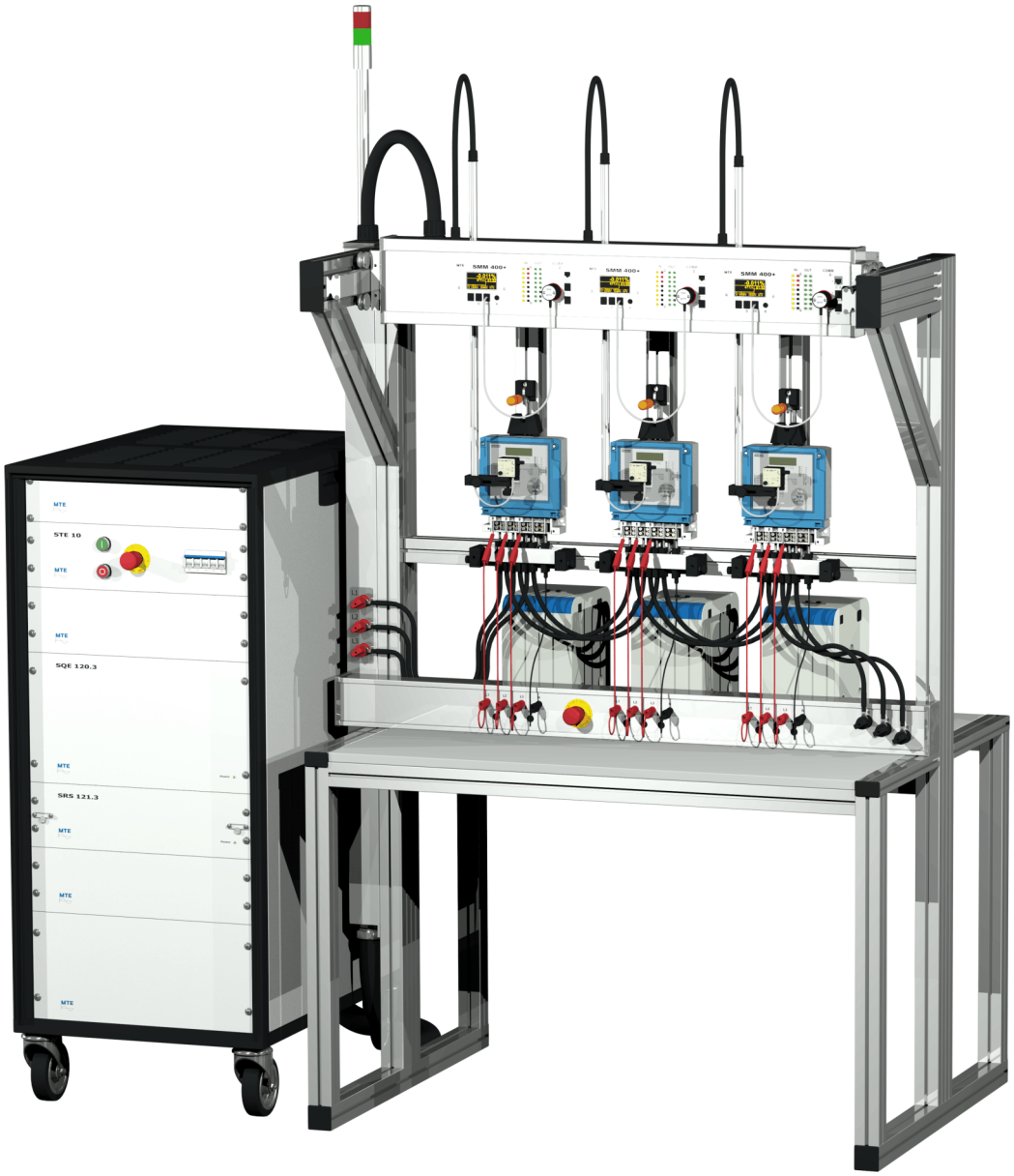


# Stationary Meter Test Systems

# System overview

MTE offers a broad range of customized high precision test systems (AC/DC) for customers such as utilities, meter manufacturers and meter test laboratories.

The individual system components of a MTE meter test system are modularly developed and can be combined in any order for testing of single- and three-phase meters with or without closed I-P links. This modular design gives flexibility and enables MTE to provide the optimal customer orientated solution for each single- or three-phase meter test system the customer requires to meet the changing needs in the metering world.

MTE offers and respects the importance to upgrade existing test systems and provides solutions to gradually replace existing systems with modern components.

Whatever the need, wherever the customer, MTE has the right solutions and the focuses on contributing to the efficiency, profitability and quality of our customers.

## Configuration of a meter test system

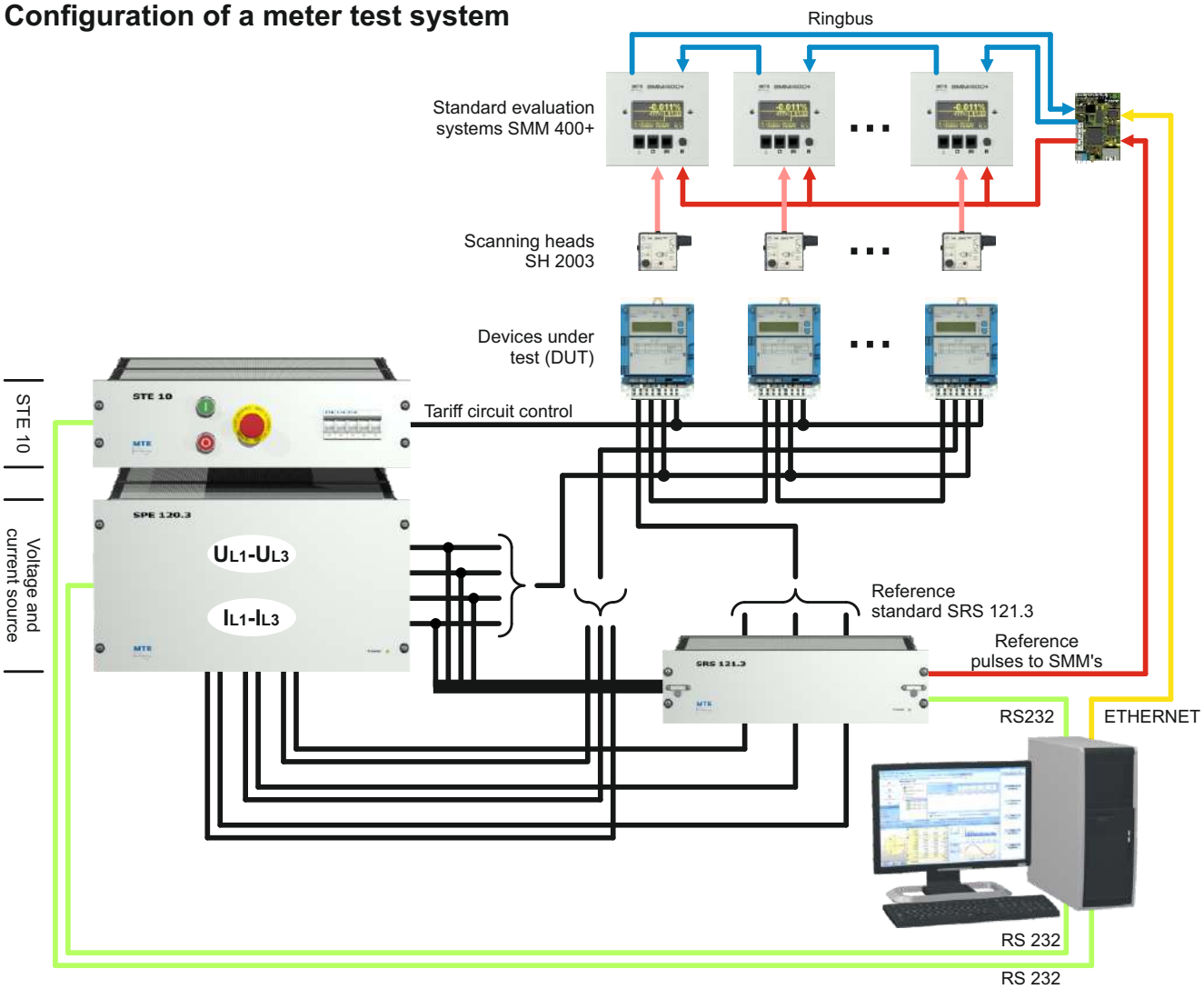

For the detailed explanation of different components, we refer to page 4 ff. or the specific MTE leaflets.

## SPE system, three-phase power source

The SPE system is an electronic voltage- and current power source and a meter supply unit (phantom load) for testing electricity meters or for testing other devices which use current or voltage. The network as generated by the SPE system is completely distinct / independent from that of the mains power supply.

The cabinet is equipped with the following components:

- Control unit STE 10
- Power source SPE 120.3 with digital voltage and current amplifiers
- Digital electronic reference meter SRS 121.3 or other types (options)
- Voltage and current ranges:
  30 V up to 300 V
  1 mA up to 120 A or
  1 mA up to 200 A
- Output power per phase:
  300 VA or 600 VA (Voltage and current)
- Power efficiency: > 85 %

## SQE system, three-phase power source

The SQE 120.3 is a further development of the SPE 120.3 with increased short term stability and integrated power quality test functions.

The SQE System is specially designed for test laboratories to perform compliance, acceptance or type tests of electricity meters and different types of power, energy and power quality measurement devices, following the existing (IEC 61000-4-30, EN 50160) and the new (IEC 62586-1,2) power quality standards.

The cabinet is equipped with the following components:

- Control unit STE 10
- Power source SQE 120.3 with digital voltage and current amplifiers
- Digital electronic reference meter SRS 121.3 or other types (options)
- Voltage and current ranges:
  0 V up to 480 V
  1 mA up to 120 A
- Output power per phase:
  600 VA (Voltage and current)
- Power efficiency: > 85 %

## PSP system, single- up to three-phase power sources

The PSP system is an electronic voltage- and current power source and a meter supply unit (phantom load) for testing electricity meters or for testing other devices which use current or voltage. The network as generated by the PSP system is completely distinct / independent from that of the mains power supply.

The cabinet is equipped with the following components:

- Control unit STE 10
- One up to three power sources PSP 10 with digital voltage and current amplifier
- Digital electronic reference meter SRS 121.3 or other types (options)
- Voltage and current ranges:
  30 V up to 300 V
  1 mA up to 120 A
- Output power per phase:
  800 VA (Voltage)
  1200 VA (Current)
- Power efficiency: > 85 %

## ZVE system, single- up to three-phase power sources

The ZVE system is an electronic voltage- and current power source and a meter supply unit (phantom load) for testing electricity meters or for testing other devices which use current or voltage. The network as generated by the ZVE system is completely distinct / independent from that of the mains power supply.

The ZVE system is composed, in general terms, of the following principal units:

- One up to three voltage sources PSU 10
- One up to three current sources PSI 10
- Control unit STE 10
- Digital electronic reference meter SRS 121.3 or other types (options)
- Voltage and current ranges:
  30 V up to 300 V
  1 mA up to 120 A or
  1 mA up to 200 A
- Output power per phase:
  1000 VA / 2000 VA / 4000 VA
  (Voltage and current)
- Power efficiency: > 85 %

# DC Meter Calibration System

The DC Meter Calibration System is designed to test single-phase DC electricity meters with open and closed I-P links. It is fully electronic, using only solid state electronic components and is controlled by a PC via the integrated ethernet interfaces.

The system is equipped with following components:

- DC Power source with one DC voltage amplifer and two DC current amplifiers
- DC reference standard SRS 121.1 DC
- Control unit STE 10

## DC Power Source

Fully static single-phase DC sources for the generation of voltage and current for the meters under test. The power sources run completely distinct/independent from that of the mains power supply.

## DC Voltage amplifier

- Voltage range: 0 ... 1200 VDC | 2400 W
- Accuracy: ≤± 0.2 %
- Stability: ≤± 0.05 %

## DC Current amplifiers

- Current range: 0 ... 80 ADC | 1200 W
  0 ... 600 ADC | 10000 W
- Accuracy: ≤± 0.2 %
- Stability: ≤± 0.05 %

## DC Reference Standard

The SRS 121.1 DC is a 6-channel single-phase reference standard for DC power / energy class 0.04 for verification of 1 up to 6 DC Meters or DC Energy Measuring Units of EVSEs (Electric Vehicle Supply Equipment) at the same time.

- Voltage range: 0.5 ... 1000 VDC
  (1500 VDC on demand)
- Current range: 0.1 ... 600 ADC
- Accuracy: ≤± 0.04 %

SRS 121.3 Stationary reference standard, accuracy class 0.05
SRS 400.3 Stationary reference standard, accuracy class 0.02

## Stationary reference standards

The electronic system reference standards in accuracy class 0.05 or 0.02 are precision measurement units for all AC values, which are used in the measurement of energy. The wide measurement range and the high precision are the main characteristics of the reference standards.

**SRS 121.3, accuracy 0.05 %**
Current range: 1 mA ... 120 A or 1 mA ... 200 A

**SRS 400.3, accuracy 0.02 %**
Current range: 1 mA ... 120 A or 1 mA ... 200 A

PRS 600.3, Portable reference standard, accuracy class 0.02

## PRS 600.3 Portable reference standard

The PRS 600.3 is a combination of a three-phase portable reference standard of accuracy class 0.02 and an IEC 61000-4-30 class A compatible Power Quality Analyzer with 3 voltage and 3 current channels. The device is equipped with two 8.4" colour TFT VGA displays based on touch screen operation. The reference standard is used to test single- and three-phase meters, instrument transformers and installations on-site.

The power quality analyzer is used to resolve disputes at contractual applications, for statistical surveys, including EN 50160 reporting, and for online troubleshooting of different kind of power quality problems.

K2008, Three-phase comparator, accuracy class 0.005

## K2008 Comparator

K2008 is a three-phase comparator of accuracy class 0.005 (50ppm) with direct voltage and current inputs. It has been designed for universal laboratories and test applications and is intended for checking and the calibration of reference standards for electrical power and energy. In addition, it can be integrated into meter or reference standard test systems of highest accuracy.

The superior accuracy of the K2008 will be ensured by a combination of measures such as the use of 24bit A/D converter technology, a Sharc DSP and a measuring range concept adapted to typical test points of most recognized national metrological institutes.

# Error evaluation systems

The modular evaluation system **SMM 400 performs error calculation**, testing of emitting contacts and communication to tariff device units to the meter under test.

Four different versions covering customer´s requirements are available:

- **Meter error calculator** with SMM 400 bus-master without error display
- **Basic meter error calculator** with SMM 400 bus-master and SMM 400 error calculator module
- **Standard evaluation system** with SMM 400 bus-master and SMM 400+ system evaluation module
- **Extended evaluation system** with SMM 400 bus-master, SMM 400+ system evaluation module and addition IN/OUT module for 8 in- and 8 outputs and / or COMM communication module

## Functions

- Meter error measurement with scanning head
- Meter error measurement of emitting contacts
- Impulse generator
- Graphic meter error display
- Reset button
- Communication interfaces RS 232, RS 485, CL, M-Bus and ETHERNET

## Options

- **IN/OUT** module for 8 in- and 8 pulse outputs and 10-30 VDC supply for S0 inputs
- **COMM** module with ETHERNET, M-Bus and RS 485 interfaces

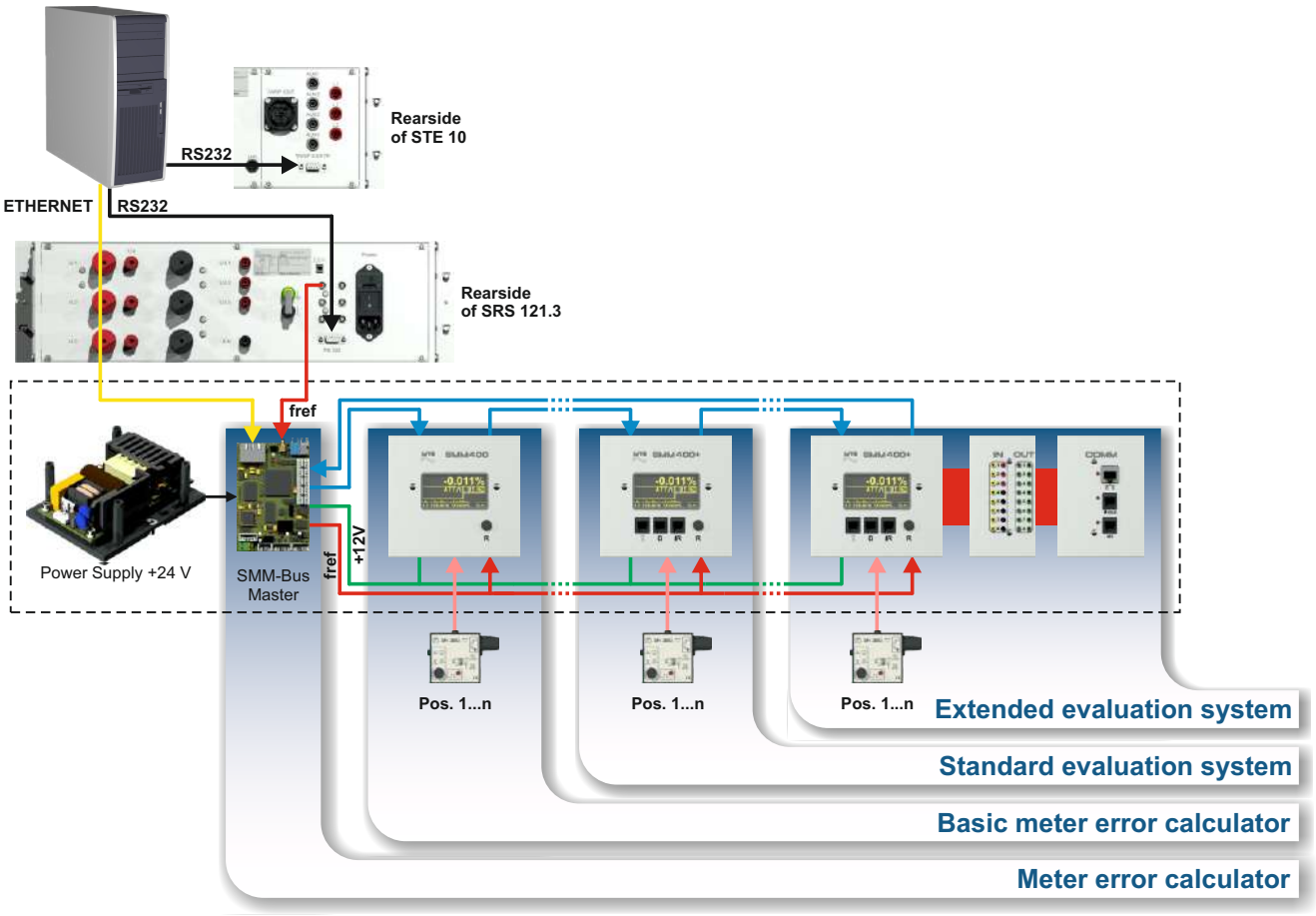

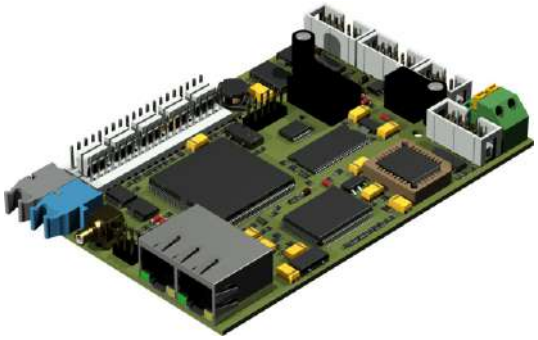

**SMM 400 Bus-Master** provides the interface between personal computer (via ETHERNET) and the system modules over RS 485-Ringbus.

The SMM 400 Bus-Master is equipped with an error calculator for 10 meter positions and 10 direct inputs for scanning head pulses.

**SMM 400** is a one channel error calculator with one input on the rear side for scanning head pulses from SH 2003 or SH 11. A reset-button allows a restart of the measurement. The meter error is shown on a full graphic OLED display.

**SMM 400+** Meter evaluation module with a full graphic OLED display, reset-button and 2 scanning head pulse inputs is the perfect solution for testing modern (smart) meters.

The sockets are used for:

Socket ⎍ IN and OUT of fast and slow pulses

Socket D: Serial interface RS 232 and 20mA - current loop interface (CS)

Socket IR: Serial infrared interface, e.g. for readout of tariff devices with optical communication head OKK

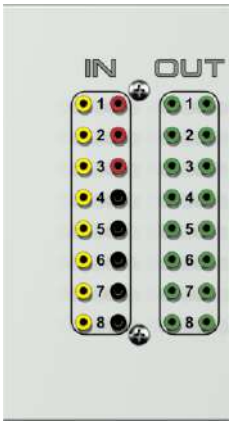

The module **IN/OUT** is equipped with the following in- / outputs:

- 8 Pulse inputs (IN) for testing of meter emitting contacts
- 8 Plus outputs (OUT) send pre-defined pulse to the meter under test

The module **COMM** is equipped with the following interfaces:

- ETHERNET
- M-Bus interface
- RS 485 interface

# Meter test racks

Our meter test racks are made of robust aluminum profiles. The standard rack consists of a working table, equipped with fixations for single- or three-phase meters. The quick connections for the meters under test can be arranged horizontal or in the vertical way. Each meter position is equipped with an error evaluation system, safety sockets for the connection of the measuring voltage and movable scanning head carriages.

Thanks to the modular design structure of the meter test racks, special versions can be adapted easily with regard to the number of measurement positions, mechanical arrangements and technical specifications according to customer needs:

- Several quick connection devices according to IEC-, BS- or ANSI-standards are available, which allow fast suspension and connection of meters
- Relay outputs for tariff control
- Hand held terminal with or without barcode reader
- Tariff readout system etc.

This picture shows a meter test rack with total 10 measurement positions for 10 bottom connected DIN meters or 10 chassis meters.

This example shows a meter test rack with total 20 horizontal measurement positions in one row of ten on the front and one row of ten on the rear side.

For the substantial throughput of single- and three-phase meters (volume production) MTE recommends the horizontal alignment of the meters under test in an automatic test system.

Whilst the test of the meters of the first load is running, a second load of meters can already be assembled on another sledge. In addition, due to the more stabilized horizontal positioning and arrangement of the scanning heads, readjustment is seldom and the efficiency of the whole testing process can be increased significantly. This setting ensures a high degree of efficiency.

Gantry systems on trolleys are used, if many special or different single- and three-phase meter types require a quick and flexible adaptation in the test procedures. Whilst the test is running other trolleys can be used in parallel to perform the assembly, preheating and if required meter isolation test. That guarantees the user an ongoing throughput.

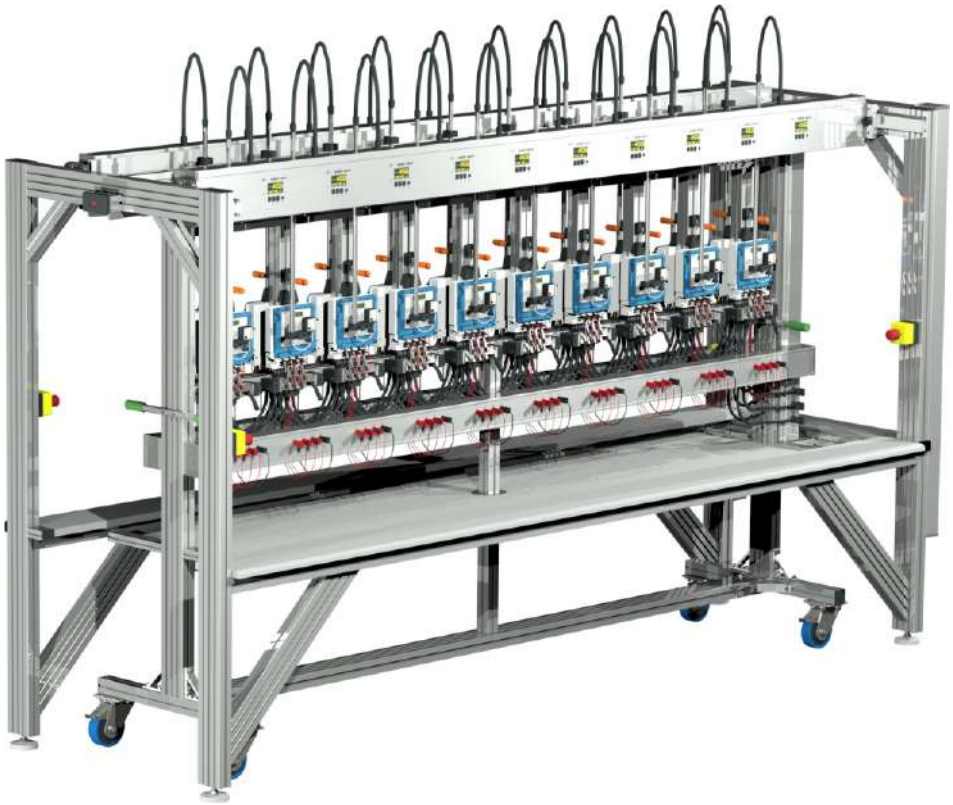

## Example of an automatic three-phase test system for 40 positions

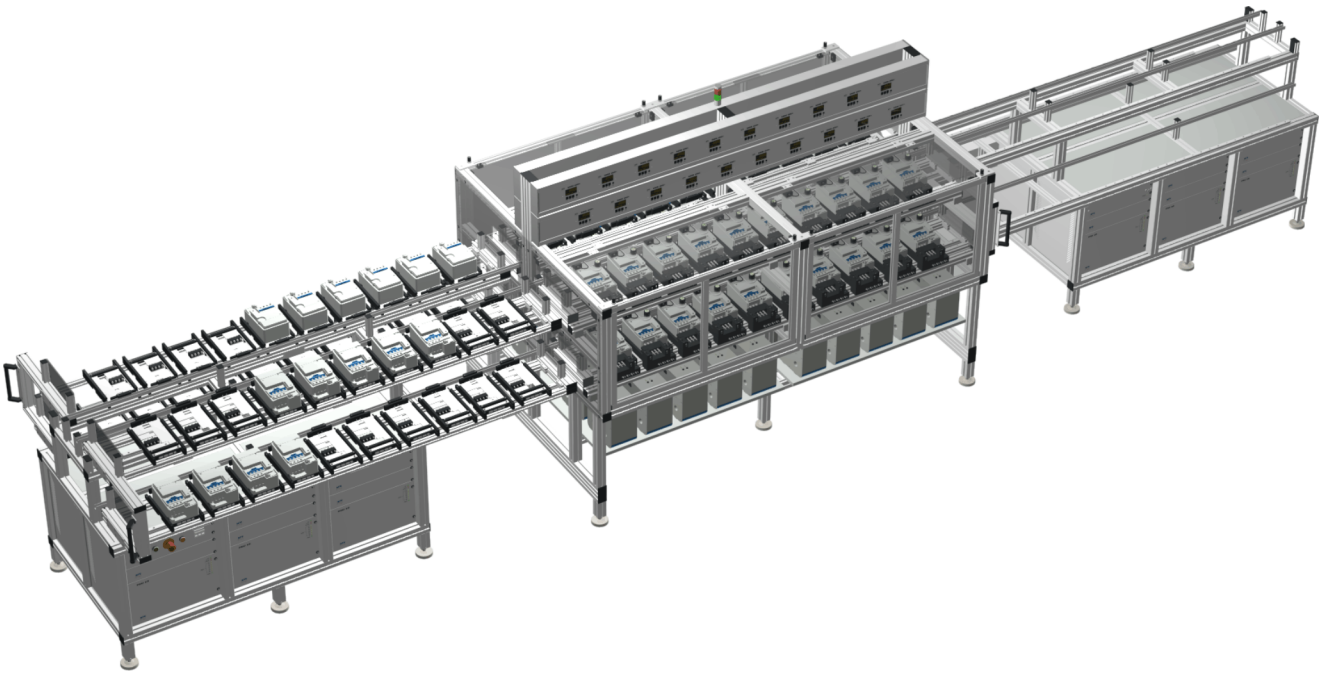

The pictures show an automatic test system for e-distribuzione, Italy. This system can be divided basically into three sections. In the left or right section the meters are assembled, in the middle section the meters are tested. Once calibrated, configurated and examinated, they are removed from the test system in the right or left section. While the test of the meters of the first load is running, a second load of meters can already be assembled on the other sledge, providing a continuous flow of tested meters and substantial throughput.

Having more than 20 years of experience with such sophisticated systems, MTE continuously improved its approach with innovative developments to meet highest customer requirements.

**Example of a fully automatic smart test system for high volume testing of single-phase meters**

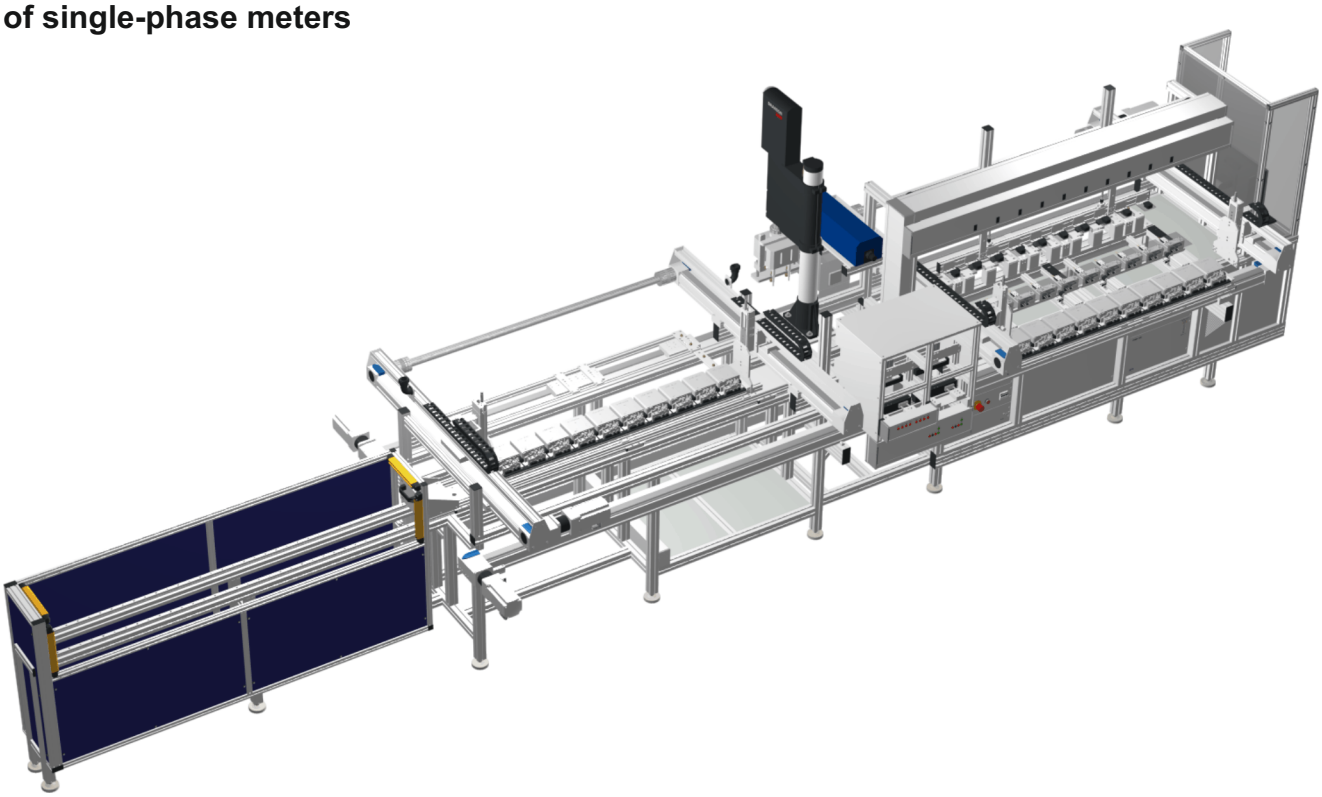

This highly customized project example shows a fully automatic test system for single-phase meters on 5 trays with 10 measuring positions each.

The system is divided into 6 different sections and test modules. Its throughput is up to one million tested meters per year.

Following steps and individual test modules are integrated in the system:

- Function and high voltage test
- Voltage and current connection / meter calibration
- Meter configuration and examination of displays
- Automatic laser printing of name plates

Furthermore, this Smart Test System got the approval for the security of their system according to the ISO / IEC 27001 standards that are describing best practice for an Information Security Management System (ISMS).

### 1 to 6 Position Test System for DC Electricity Meters or DC Energy Measuring Units of EVSEs with U and I path connected

- Voltage range: 100 V … 1000 V
- Current range: 5 A … 600 A
- DC reference standard class 0.04 (6 channels)

If 2 or more DC electricity meters with closed link (voltage and current path connected) are tested and the test voltage is connected to the current at position 1, the following positions will see a lower test voltage, reduced by the voltage drop on the current path between the meters, which varies with the current amplitude.

To overcome this issue with variable test voltages influencing the accuracy of the calibration, a DC reference standard with 6 U channels is used to measure the exact test voltage at 1 up to 6 test positions individually. Together with the common current sensors these leads to 6 DC power reference channels with 6 pulse outputs fref 1 … fref 6 connected to 1 up to 6 error evaluation modules SMM 400+. These are used for error measurements, if the DUTs are equipped with optical or electrical pulse outputs. Should no pulse outputs be available, register tests can be performed individual for each position.

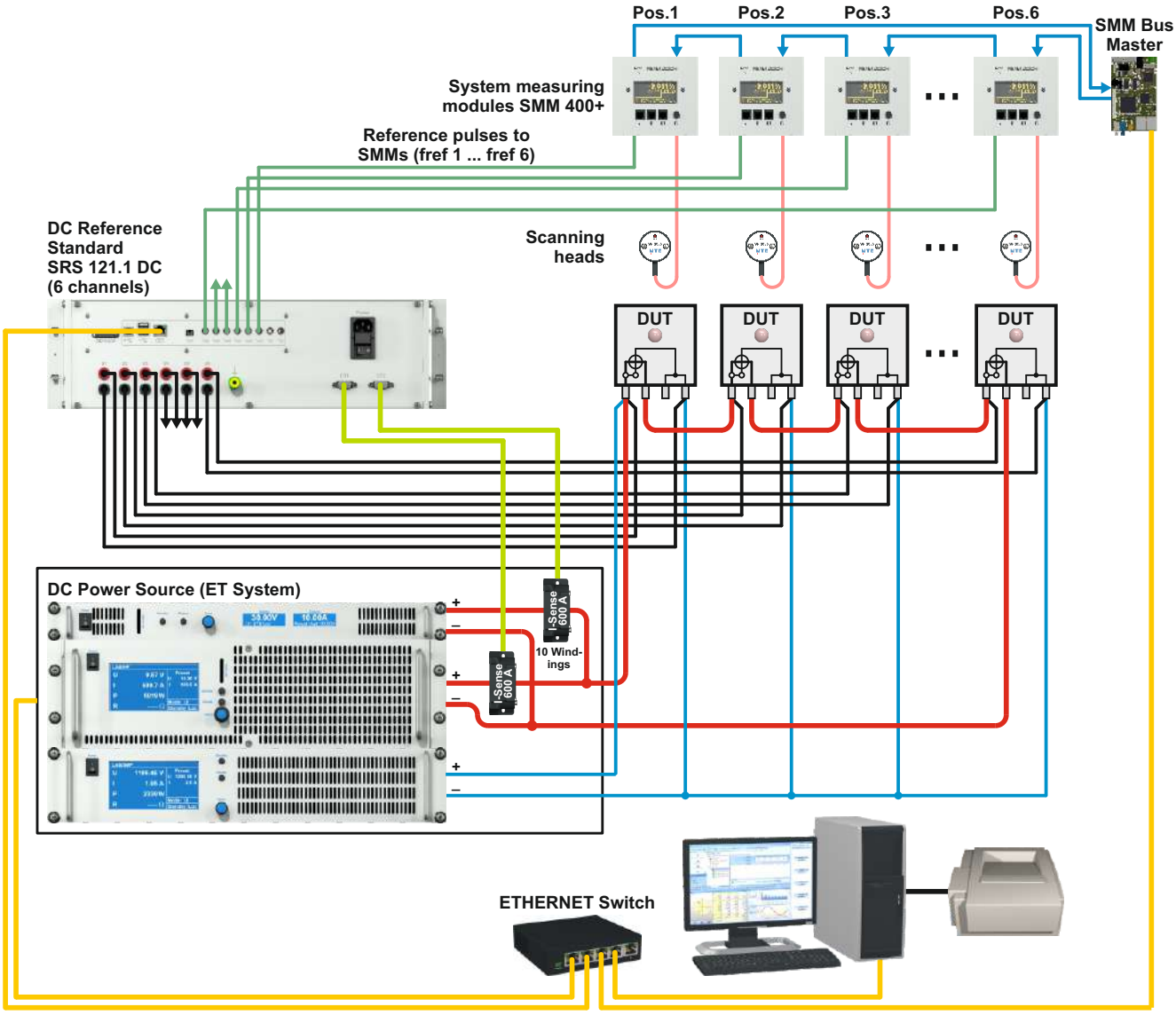

**Test bench for calibration of 5 single-phase DC electricity meters**
**DC reference standard and power source, single-phase:**

- Voltage range: 100 V … 1000 V
- Current range: 5 A … 600 A

**CALegration® is an all-in-one software package designed to control the latest MTE test equipment product line, including the recording and evaluation of meter and measurement data.**

**CALegration® bundles the functionalities and advantages in one brand new and comprehensive software package.**

**Covering all requirements of the modern meter testing environment CALegration® also provides the flexibility to easily incorporate future meter testing requirements.**

Tests can be carried out for simple or highly complex meters (smart meters) in accordance with the customers requirements and national / international test and calibration regulations (e.g. PTB, IEC, BS, ANSI).

## Advantages of CALegration®

- **Reduced complexity** due to an all-in-one software for the entire MTE product portfolio
- **User-friendly operations** and clearly arranged user interface making the system easy understandable, also to operators with limited computer knowledge
- **SQL based database** with stable access, organized backups, extended database size and server installation support
- **Full database interchange** between portable devices and CALegration® with control of portable functions by external PC
- **Flexible access** to database and **fast storage and interchange** of new testing data packages
- **Fully-automatic test sequences** for meter testing with clearly laid out database structure
- **Manual control module** for testing various individual functions such as meter test, recording of load values, detection of installation errors and many more
- Prepared for **power quality testing** and analysis functions according to IEC 62586 and IEC 61000-4-30 for specific MTE devices
- Transparent evaluation and presentation of results, **statistics and schematic diagrams** of all relevant values in an individual created protocol
- **Modular system** allows the integration of customer specified applications
- Suitable for use with **various hardware combinations**
- **Data export** in standard format (e.g. MS Excel)
- Operator interface available in **several languages** and in different **color profiles**

CALegration® combines the various functional modules required in modern stationary and portable test devices, with a common and consistent user interface.

The modular system allows control of various hardware units with a common software platform.

## Automatic meter testing

Automatic meter tests are executed in three steps:

1. The user defines the meter and meter type, the test point elements and the test procedures
2. The test is executed and the results are stored in the database
3. The results can be presented in a simple test results form, or be post-processed for the presentation in form of a report

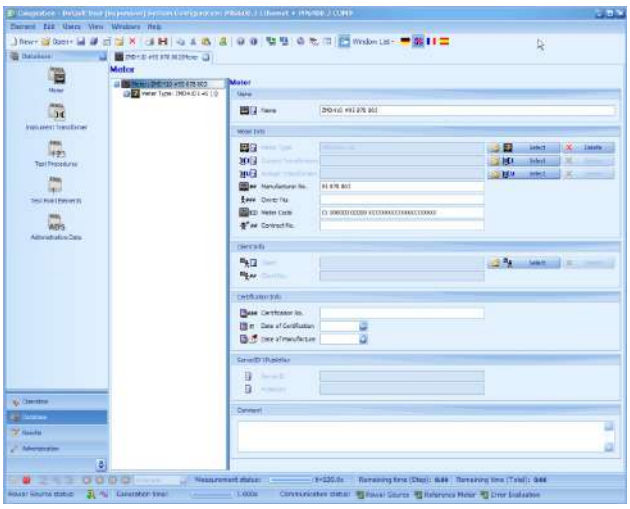

## Meter and meter type definition

The meter and meter type definition function is used to define and administrate any kind of meters. The meter type definition contains the electrical und functional definitions of meters under test (connection values, meter constants registers etc.). The type definitions can further be called up and allocated to the meter stock / inventory of the customer (meter name, manufacturer number etc.).

For the tariff device communication, a communication module is assigned to the meter types. This defines the data to be selected or programmed plus the dispatching commands, adaptable by the customer, makes the fully automatic examination of high-functional meters and tariff devices possible.

The basic version supports the communication protocol in accordance with IEC 62056-21 Mode C standard. As an additional option the communication protocol is prepared according to dlms / COSEM.

## Test procedure

A test procedure or test sequence describes the order and content of different test point elements in a whole procedure. For each test step the desired source settings (current, voltage, phase angle, frequency etc.), test settings (e.g. error measurement) and control functions (e.g. automatic meter readout) can be specified.

In addition to the respective test method (e.g. error measurement, register tests etc.) each checkpoint can be linked with control commands. Control commands display for instance instructions to the operator, switching of tariff relays or dispatching of commands.

## Meter testing

By undertaking an automatic test the user allocates to each active measurement position a meter type and selects a test procedure. Subsequently the user will comfortably be guided through the test.

The actual status of the test and active test point is clearly indicated at all times.

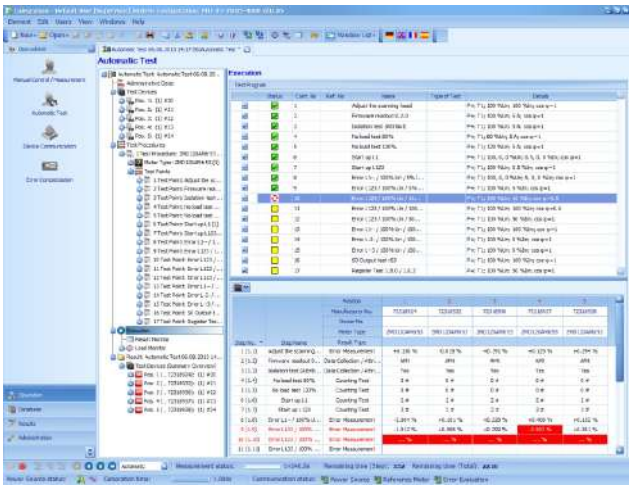

It is also possible to display simultaneously the actual test values, wave forms and results in their own windows using large, easily visible and configurable fonts.

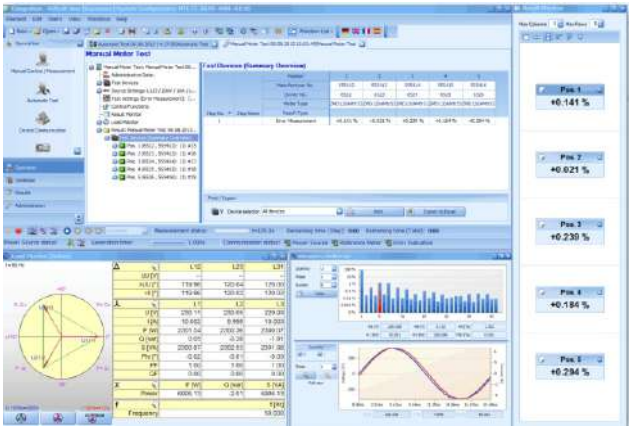

## Optional software modules

- Tariff device communication / dlms
- Reference meter testing
- Tariff device testing with pulse transmitter
- Error compensation
- Sample test modules
- Database storing
- Generation of ripple control signals
- Generation of special test signals and wave shapes according to IEC 62052-11 and IEC 62053-11/-21/-22
- Generation of harmonics

## Customer specified adaptations

MTE provides customer specified modules which can be integrated into the standard software for fully automatic calibration of modern meters. MTE also supports the integration of alternative communication protocols for tariff devices.

# Testing meters with closed IP-links using MSVT or ICT

## Key Advantages

- Customized test system for testing single-or three-phase meters without or with closed I-P links using a high accuracy voltage transformer (MSVT) or Isolation Current Transformer (ICT 2.3)
- Covering all legal test requirements for simple meters, high precision multifunction meters, smart meters and reference standards
- Multiple individual measurement positions
- Several quick connection devices according to IEC-, BS- or ANSI-standards allowing fast suspension and connection of meters

## Example of a MSVT meter test system with 10 positions

## Example of an ICT meter test system with 20 positions

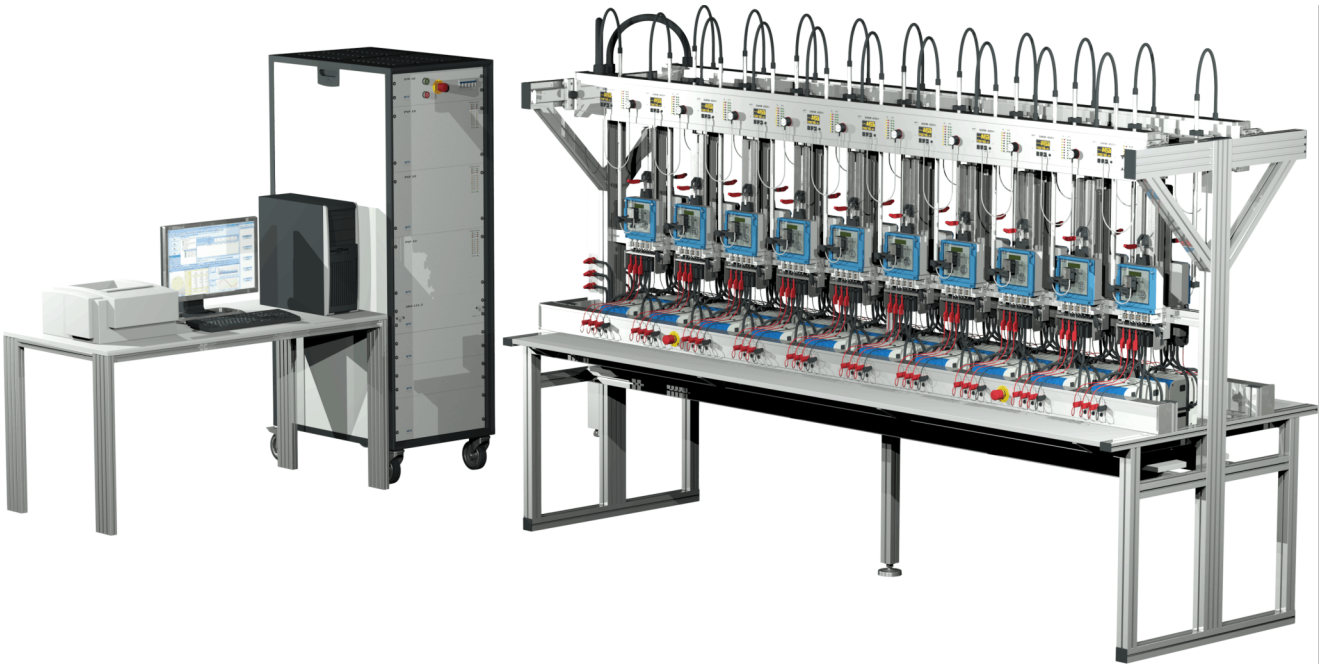

## Overview

If the meters under test do not allow opening the I-P links, then there is an unwanted connection between voltage and current path at every meter position.

Because of these connections, the line (input) and load (output) of each current measurement element are forced to be at the same potential, an effective short-circuit path exists across the current measuring circuit of every meter under test, causing a large measurement error. It is therefore not possible to test multiple meters with closed I-P connections on a conventional meter test installation without additional facilities. To be able to test these types of meters, galvanic isolation must be provided between the current and voltage circuits of each meter under test. This isolation must ensure that the closed I-P links in the meters do not cause these unwanted short-circuits and the resultant measurement errors. With single-phase meters, galvanic isolation can theoretically be carried out using either voltage or current isolation transformers.

In this case, a connected I-P link does not cause a short-circuit, as this connection is now made on the secondary side of the transformer, thus avoiding any direct connection with the other meters in the circuit.

For the testing of multiple single-phase meters with fixed / closed links between the voltage and current path (I-P links), galvanic isolation must be provided at each test position. In practice this is normally done by connecting the voltage circuit of every meter under test, through a high accuracy voltage transformer (MSVT). For cost reasons a voltage transformer with several galvanically isolated secondary windings is used.

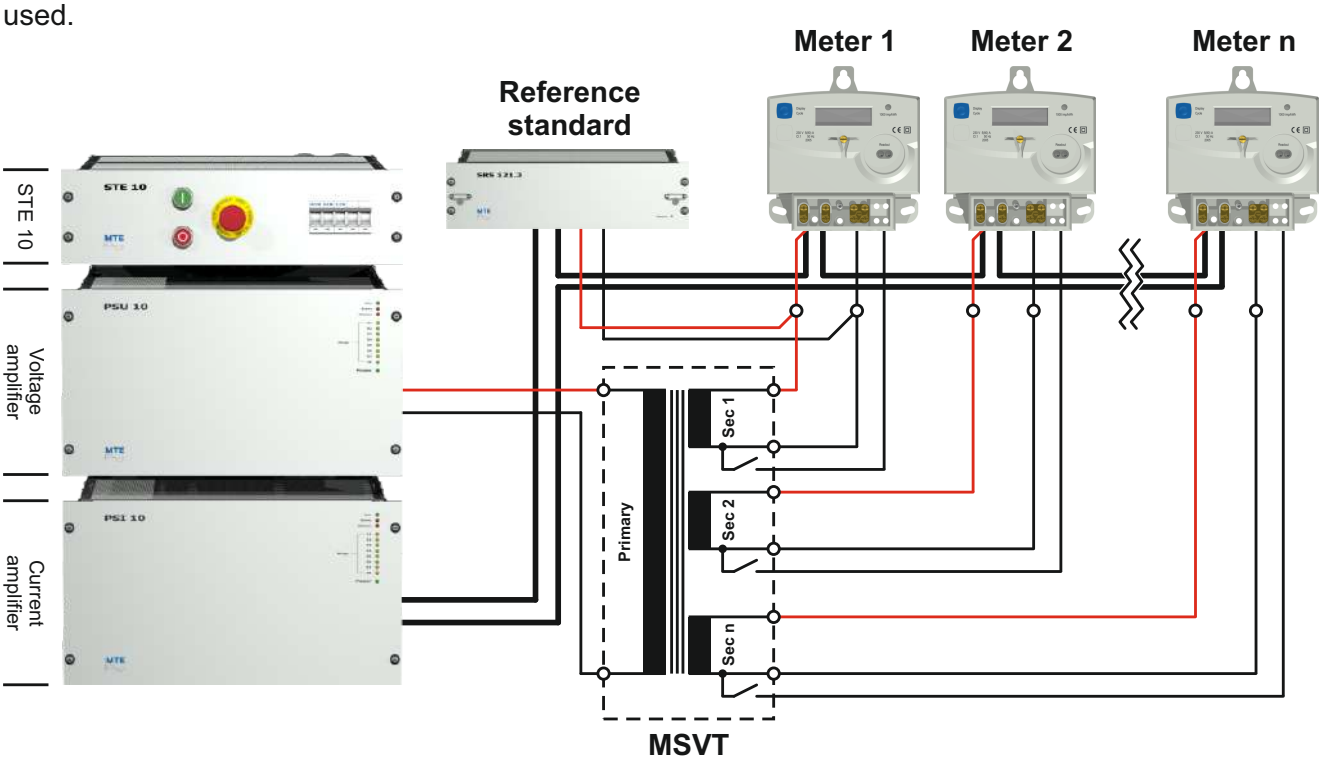

# Testing three phase-meters with closed IP-links using ICT 2.3

## Overview

While testing meters with fix closed IP-links, unwanted connections between voltage and current path at each test position will cause significant accuracy reduction.

In this case transformers in the current circuit are required to decouple the voltage from the current path.

The ICT 2.3 three-phase Isolation Current Transformer is used on multi position meter test systems for testing three-phase meters with closed links between the current and voltage measuring circuits (IP-links). Electronic meters with closed links are becoming increasingly common.

To achieve complete decoupling the test installation needs to be fitted with one current transformer per phase for each test position.

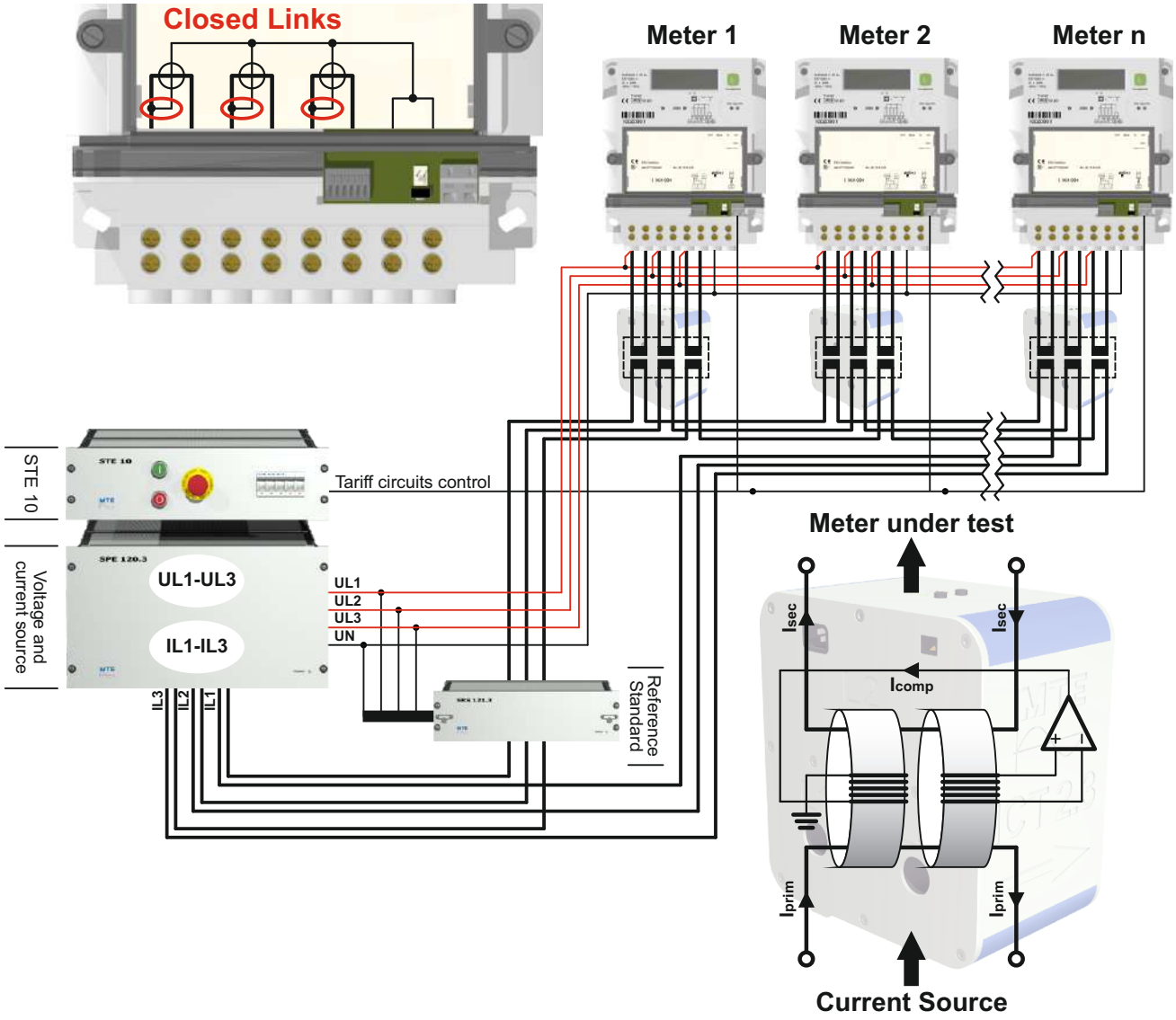

In meter testing stations, dangerous voltages above 50V AC might be available. The user must be protected from them. Following measures secure and enable a voltage separation:

- Stationary separating safety equipment
- Movable separating safety equipment
- Non-separating safety equipment

In many meter test stations, separation between energized parts and the users of test stations cannot be realized by means of stationary separating safety equipment only. For this reason, movable or non-separating safety equipment is used. To allow the use of safety switches or light curtains in meter testing stations, a safety related signal evaluation is required. Here a safety relay analyzes the starting conditions and in case of needed interrupts the dangerous voltage. This functionality is realized by a safety shutdown device (VSB10.3) connected between power source and meter test rack. The connected safety equipment (safety switch/ light curtain) acknowledges the safety.

VSB10.3 Voltage Safety Box

The measurement wires are separated and lead back to the power source in order to avoid over modulation in the power source.

In addition, the power source receives over a safe contact information about safety shutdown. After that the modulation switches off. As soon as the meter test equipment returns to safe state the process can be started again automatically or manually (this can be freely adjusted).

### Example of a safety switch

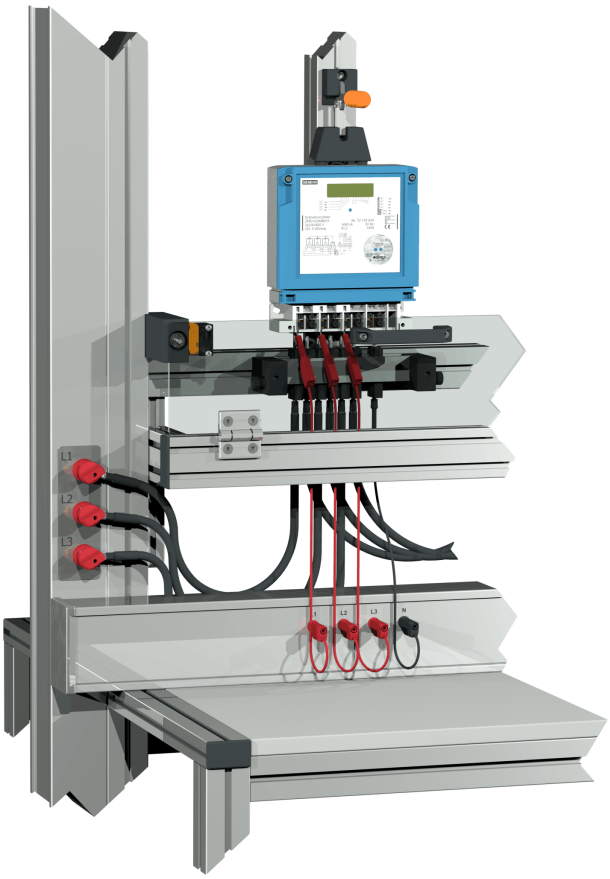

### Example of a light curtain

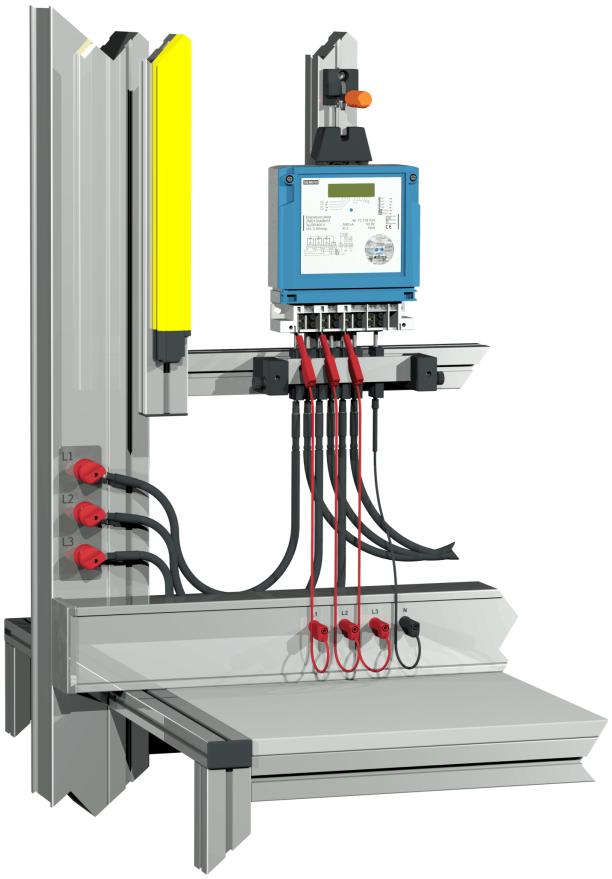

## Quick connection device QCD

This QCD quick connector may be used with current levels up to 80 A for long period testing, and with up to 100 A for short periods of time. The connector is available in three different versions, which may be used together with single- and three-phase meters.

The QCD 3 I/U is constructed identically to the QCD 3 I, with the difference that the voltage connection is assured over a jumping finger contact system.

## Quick connection device EMP 1.3

The EMP 1.3 quick connection device is especially recommended for situations where the time factor is of importance.

Thanks to the universal construction of the EMP 1.3 quick connection device, it may be used for the support and connection of practically all types of electricity meters.

This EMP 1.3 quick connection device can be used with current levels up to 100 A testing, and even with the additional high current adapters up to 120 A.

## Quick connection device QCD Form S

Due to its universal construction the QCD Form S quick connection device may be used for the support and connection of practically all types of self contained (direct connected) or transformer operated ANSI socket meters, including the most used forms 1S, 2S, 3S, 4S, 5S, 6S, 8S, 9S, 12S, 13S, 14S, 15S, 16S and 17S.

This QCD Form S quick connection device can be used with current levels up to 200 A.

## Scanning heads

The SH 2003 and SH 11 photoelectric scanning heads are suitable for use with both LED impulses from static / electronic meters and also for detecting the marks on mechanical rotating disc meters plus simulated pulses on LCD displays (SH 11). The choice of operation mode with mechanical or electronic meters is made by a simple selection switch.

With the integrated teach function of the scanning head SH 11, the optimal set-up is automatically learned. The teach function can be activated by the rotary switch or an external control signal.

## Scanning head carriages SHC 1.2 and SHC 2.2

The SHC range of scanning head carriages has been designed for use with the SH 2003 and SH 11 model scanning heads. The range is user friendly and offers a high degree of flexibility.

## Hand held terminal

The HT 2010 cordless hand held terminal with an integrated bar code reader is designed for recording meter specific data at meter test systems.

## OKK optical communication head

The communication to sophisticated electronic tariff devices / meters is performed according to IEC 62056-21 (IEC 61107) mode C, using an OKK optical communication head.

**The following MTE leaflets are available:**

| | |
|---|---|
| Overviews: | Company Portrait / Portable Test Equipment / Stationary Meter Test Systems<br>Automatic Test Systems / Transformer Monitoring / E-Mobility Testing |
| Comparator: | K2008 |
| Portable Reference Standards: | PRS 600.3 / CALPORT 300 |
| Portable Working Standards: | PWS 3.3 *genX* / PWS 2.3 *genX* |
| Portable Standards: | CheckMeter 2.3 *genX* |
| Portable Test Systems: | PTS 400.3 PLUS / PTS 3.3 *genX* / PTS 2.3 *genX*<br>CheckSystem 2.3 / CheckSystem 2.1 / CheckSystem 2.1 S |
| Portable Power Sources: | PPS 400.3 / PPS 3.3 *genX* / CheckSource 2.3 |
| Software: | CAL*egration*® |

# MTE Meter Test Equipment


**MTE Meter Test Equipment AG**
Landis + Gyr-Strasse 1
P.O. Box 7550
CH-6302 Zug, Switzerland
Phone: +41 41 508 39 39
Internet: www.mte.ch
e-mail: info@mte.ch

**EMH Energie-Messtechnik GmbH**
Vor dem Hassel 2
D-21438 Brackel, Germany
Phone: +49 4185 58 57 0
Fax: +49 4185 58 57 68
Internet: www.emh.eu
e-mail: info@emh.de

**MTE India Private Ltd.**
Commercial Unit - 118 & 119, First Floor
Plot No. 10, Aggarwal City Square, District Centre,
Mangalam Place, Rohini Sector-3, Delhi 110085, India
Phone: +91 11 40218105
E-Mail: info@mteindia.in

**EMH Energie-Messtechnik (Beijing) Co. Ltd.**
Section 305, Building 2, Ke-Ji-Yuan
Nr.1 Shangdi-Si-Jie, Shangdi-Information-Industry-Base
Haidian District
Beijing 100 085, P.R. China
Phone: +86 10 629 81 227
Mobile: +86 139 0 103 6875
Fax: +86 10 629 88 689
e-mail: guo@emh.com.cn

**MTE Meter Test Equipment (UK) Ltd**
4 Oval View
Woodley Stockport
Cheshire SK6 1JW, United Kingdom
Phone: +44 161 406 9604
Fax: +44 161 406 9605
e-mail: info@mte.uk.net

**MTE Meter Test Equipment Inc.**
4949 S Syracuse, Suite 550
Denver, CO - 80237, USA
Phone: +1 888 888 8888
e-mail: info@mteus.com


Test it!